DR3068B | Graphite Brush

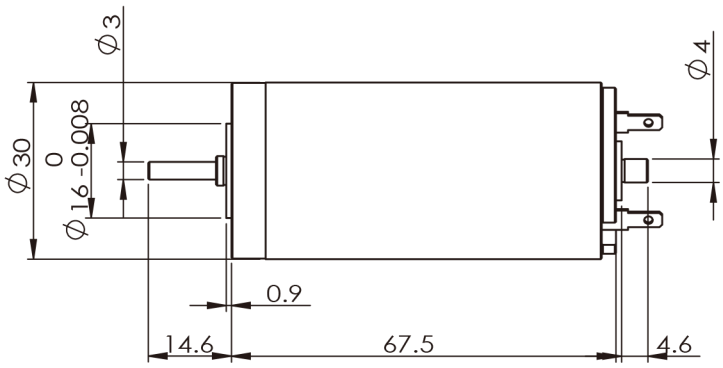

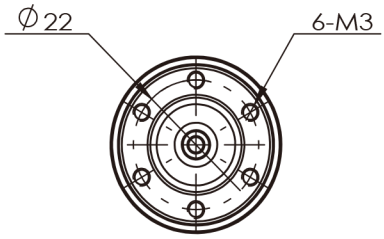

Motor Data

	motor model			DR306812B	DR306818B	DR306824B	DR306836B	DR306848B
1	nominal voltage	V	V	12	18	24	36	48
2	no load speed	rpm	Wnl	8170	8590	8380	8590	8490
3	no load current	mA	Inl	301	213	150	106	78.6
4	nominal speed	rpm	Wc	7630	7910	7600	7840	7760
5	nominal torque	mNm	Tc	51.6	75.5	85.6	86.6	89.7
6	nominal current	A	Ic	4	4	3.15	2.28	1.74
7	output power	W	Pc	41	63	68	71	73
8	stall torque	mNm	Tmax	852	1000	669	1000	1050
9	stall current	A	Imax	61.1	50.3	24.6	25.2	19.6
10	max. efficiency	%	ηmax	85	87	90	87	88
11	terminal resistance	Ω	Rt	0.196	0.358	0.71	1.43	2.45
12	torque constant	mNm / A	Kt	13.9	19.9	27.2	39.8	53.8
13	speed constant	rpm / V	Kn	685	479	349	240	178
14	speed torque gradient	rpm / mNm	Δn / ΔT	9.64	8.61	9.1	8.61	8.09

Specifications

1	ambient temperature	Ta	-30~+100 °C
2	Max.winding temperature	Tcoilmax	+125°C
3	Max.speed	Nmax	12000rpm
4	axial play	△t	0.05~0.15mm
5	number of pole pairs	2p	1
6	number of commutator segments		13
7	weight of motor	Wt	260 g
8	Max.axial load(dynamic)		5.6N
9	Max.force for press fits(static)		110N
10	Max.radial load,4mm from flange		28N

Operating Range

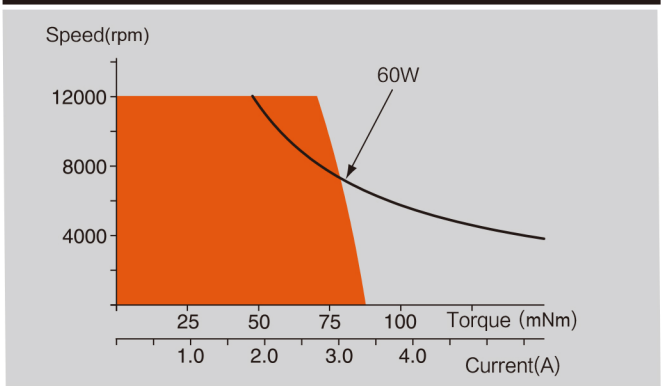

SMJ Modular System

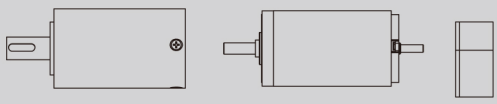

Planetary Gearhead
Type P32H
Diameter φ32
Torque 0.16~6N·m
See page 38

Encoder HEDS_5540
500 CPT
3 channels
see page 34