DR2347B | Graphite Brush

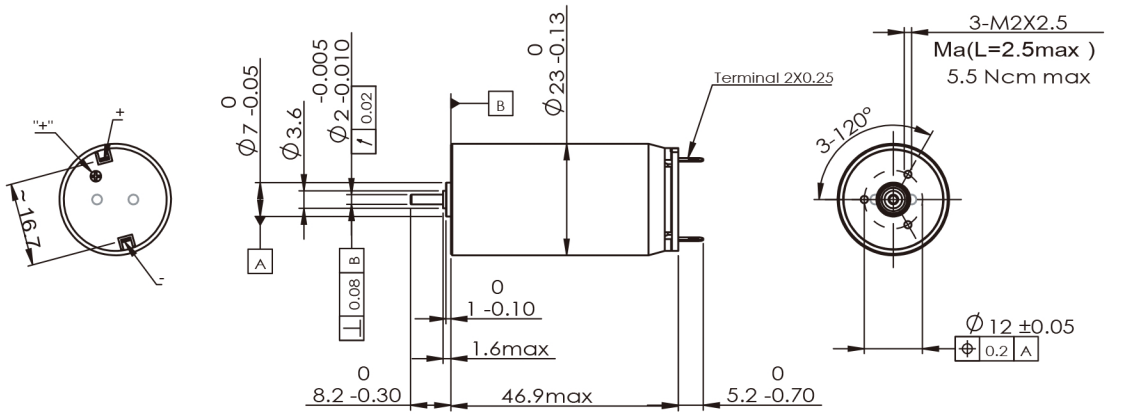

Motor Data

	motor model			DR234709B	DR234724B-01	DR234724B-02		
1	nominal voltage	V	V	9	24	24		
2	no load speed	rpm	Wnl	7370	7570	10350		
3	no load current	mA	Inl	<40	<18	<30		
4	nominal speed	rpm	Wc	6160	6350	9280		
5	nominal torque	mNm	Tc	17	28.1	28.1		
6	nominal current	A	Ic	1.46	0.93	1.27		
7	output power	W	Pc	11	18.7	27.3		
8	stall torque	mNm	Tmax	101	126.8	265.2		
9	stall current	A	Imax	8.74	4.2	12		
10	max. efficiency	%	ηmax	83	80	80		
11	terminal resistance	Ω	Rt	1.03	5.7	1.99		
12	torque constant	mNm / A	Kt	11.6	30.2	22.1		
13	speed constant	rpm / V	Kn	823	315	43.1		
14	speed torque gradient	rpm / mNm	Δn / ΔT	71.2	43.4	38.1		

Specifications

1	ambient temperature	Ta	-20~+65°C
2	Max.winding temperature	Tcoilmax	+85°C
3	Max.speed	Nmax	16000rpm
4	axial play	△t	0.05~0.15mm
5	number of pole pairs	2p	1
6	number of commutator segments		5
7	weight of motor	Wt	56g
8	Max.axial load(dynamic)		3N
9	Max.force for press fits(static)		45N
10	Max.radial load,4mm from flange		12N

Operating Range

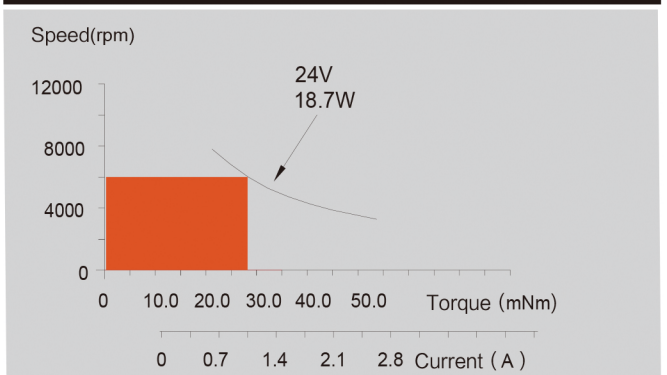

SMJ Modular System

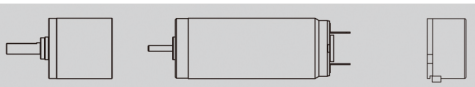

Planetary Gearhead
Type P22H
Diameter φ22
Torque 0.031~1.2N·m
See page 37

Encoder HKT22
256 CPT
2 channels
see page 33