# BEA100

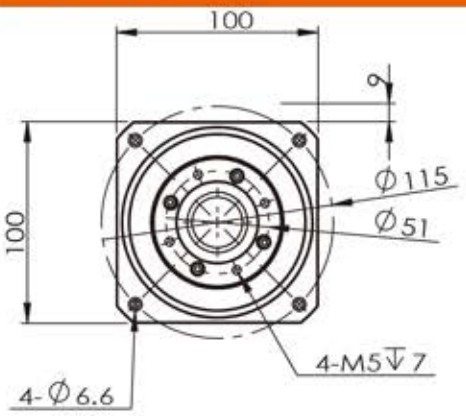


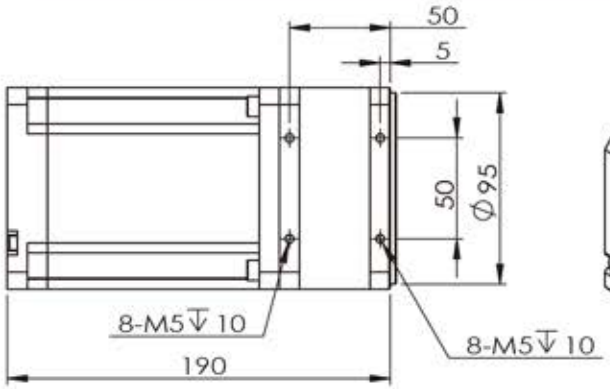


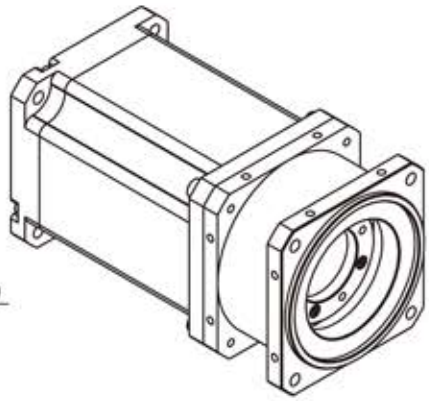

## Motor Data

| | | | | | | |
|---|---|---|---|---|---|---|
| 1 | motor model | | BEA10048 | BEA10072 | | Unit |
| 2 | nominal voltage | VT | 48 | 72 | | V |
| 3 | nominal torque | TR | 2.5 | 2.5 | | Nm |
| 4 | peak torque | TP | 25.6 | 38.4 | | Nm |
| 5 | nominal current | IR | 15 | 15 | | A |
| 6 | peak current | IP | 140 | 210 | | A |
| 7 | nominal speed | NR | 2300 | 3450 | | rpm |
| 8 | power at nominal speed | PR | 600 | 900 | | W |
| 9 | number of pole pairs | 2p | 4 | 4 | | |
| 10 | rotor inertia | J | 35.4 | 35.4 | | Kg*cm^2 |
| 11 | shaft type | Ballscrew & Sliding screw | | | | |
| 12 | screw diameter | φ15; φ16; φ20; φ25 | | | | |
| 13 | feedback | None | | | | |
| 14 | protection class | IP64 | | | | |
| 15 | motor insulation class | class B | | | | |

## Screw selection reference

| lead mm | Nominal thrust force kgf | Maximum thrust force kgf | Nominal speed mm/s | | lead mm | Nominal thrust force kgf | Maximum thrust force kgf | Nominal speed mm/s | |
|---|---|---|---|---|---|---|---|---|---|
| | | | BEA10048 | BEA10072 | | | | BEA10048 | BEA10072 |
| 5 | 308 | 1351 | 192 | 288 | 20 | 77 | 338 | 767 | 1150 |
| 10 | 154 | 675 | 383 | 575 | 25 | 62 | 270 | 958 | 1438 |
| 16 | 96 | 422 | 613 | 920 | | | | | |